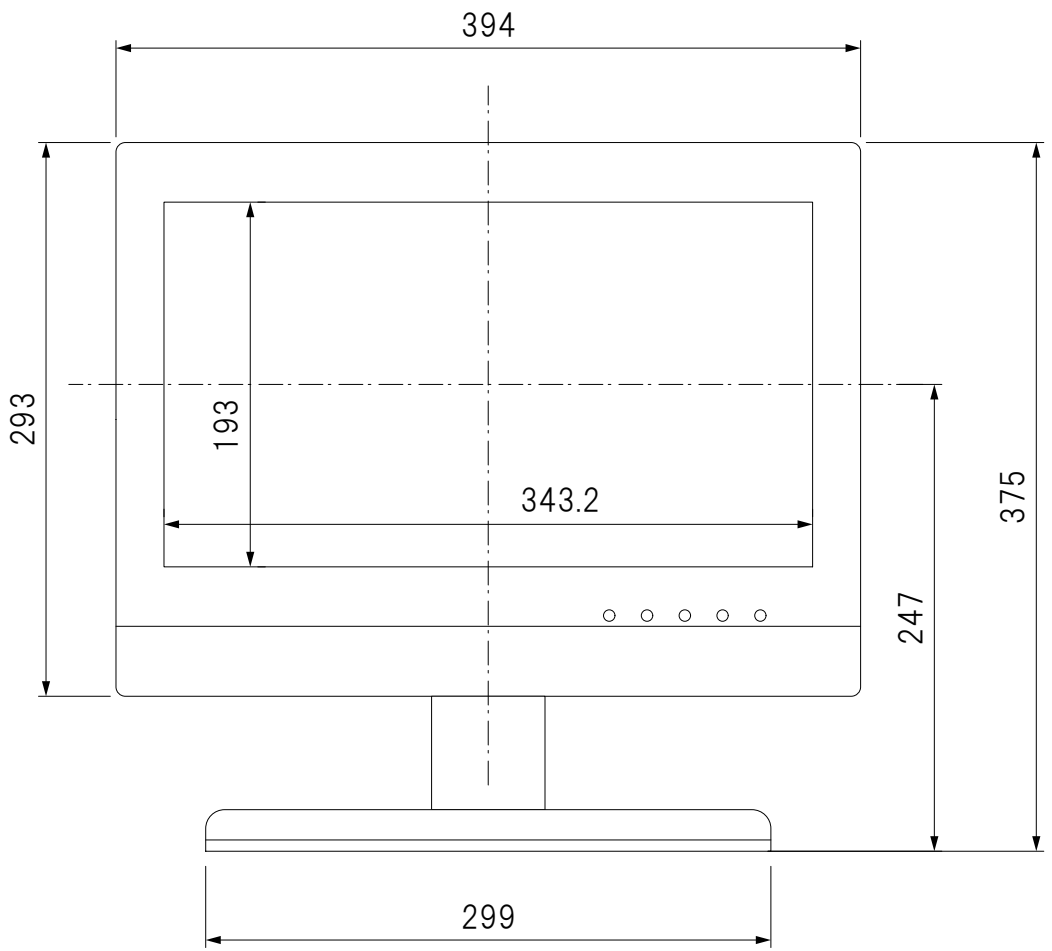

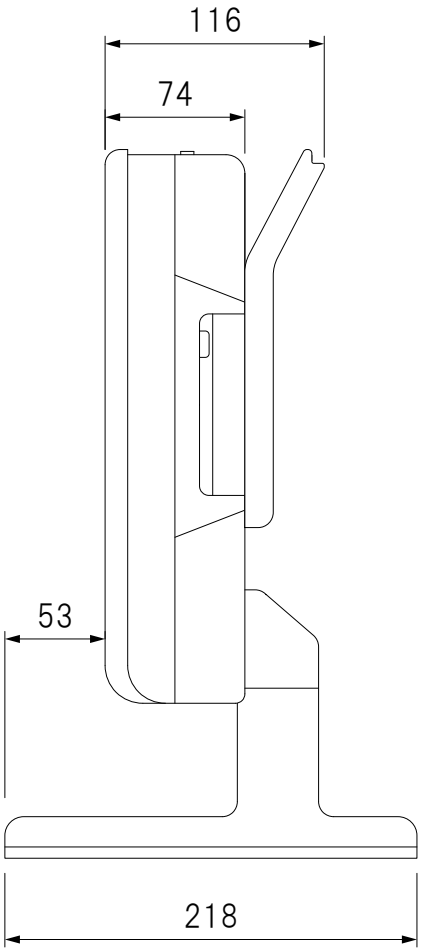

重量：約4.3kg
消費電力：52w

International Creative	Model Number LC-16E5	Manufacturer SHARP	Screen Size 16inch	SCALE 1/4	UNIT mm	SIZE A4	DATE 2011.7